Miscellaneous

# Extrusions

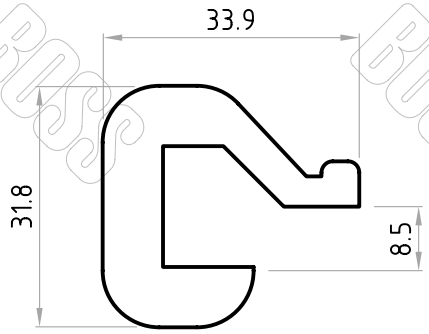


Part No. D02330

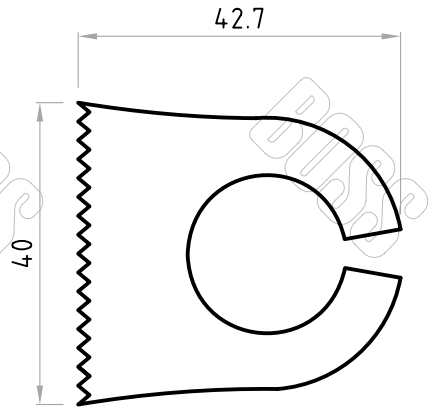


Part No. D01071

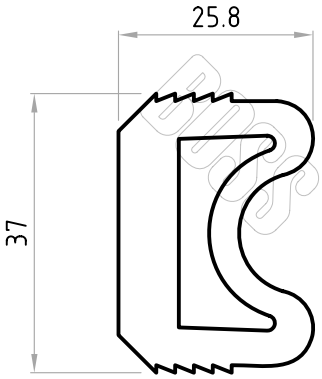


Part No. D02255

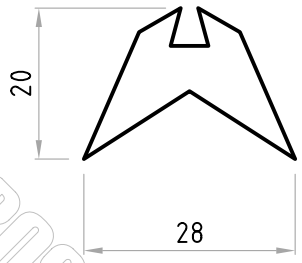


Part No. D00787

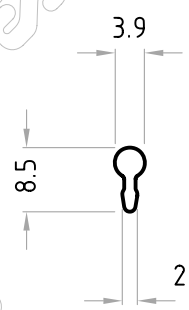


Part No. D02505

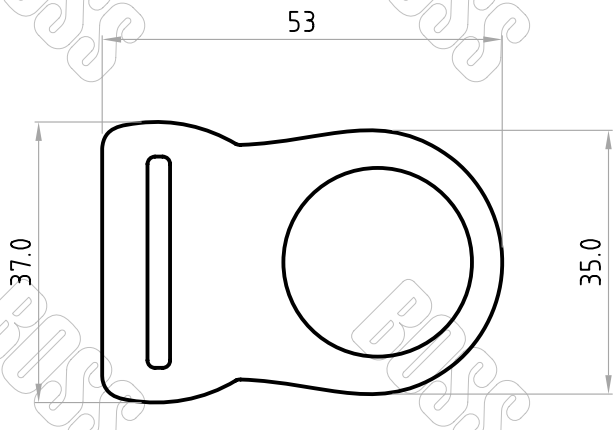


Part No. D01093

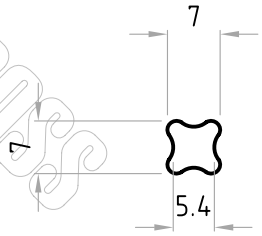


Part No. D03398

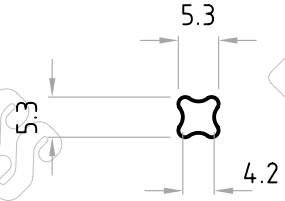


Part No. D03397

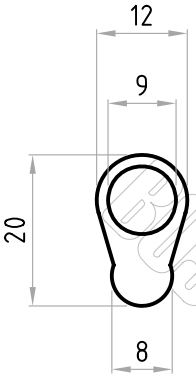


Part No. D02457

* Profile drawings appearing in this section are indicative only. some profiles may be restricted to specific customers, patents and or other limitations,

The material displayed on this page may not be reprinted or otherwise reproduced without the express written permission of Boss Polymer Technologies.

BOSS POLYMER TECHNOLOGIES PTY LTD
Melbourne Australia
PH: (613) 9561 2777
FAX: (613) 9560 8777
www.bosspolymer.com.au
E-MAIL: sales@bosspolymer.com.au

# Miscellaneous
# Extrusions

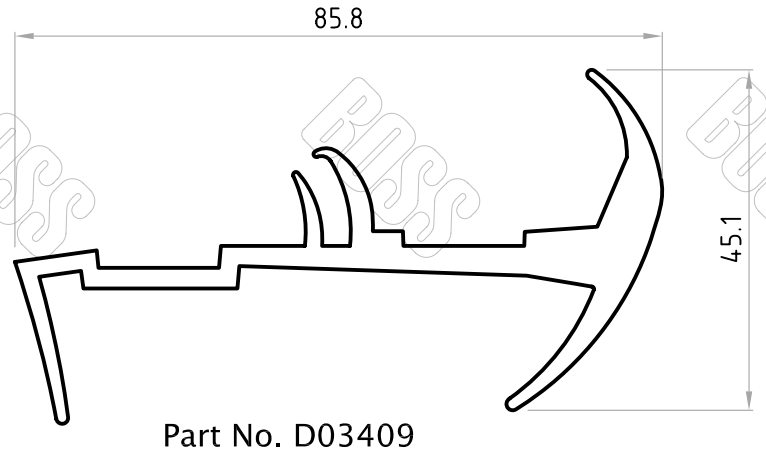


Part No. D03409

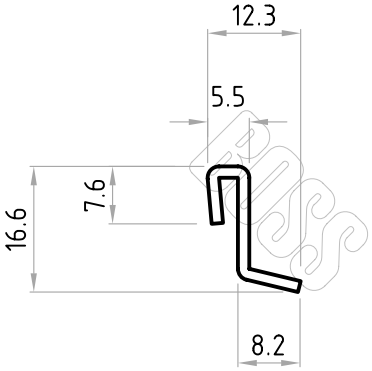


Part No. D02222

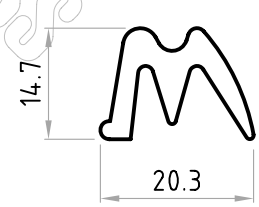


Part No. D00730

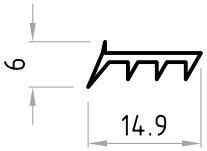


Part No. D02946

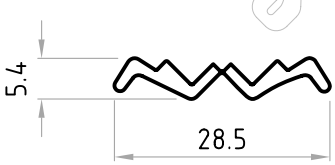


Part No. D02339

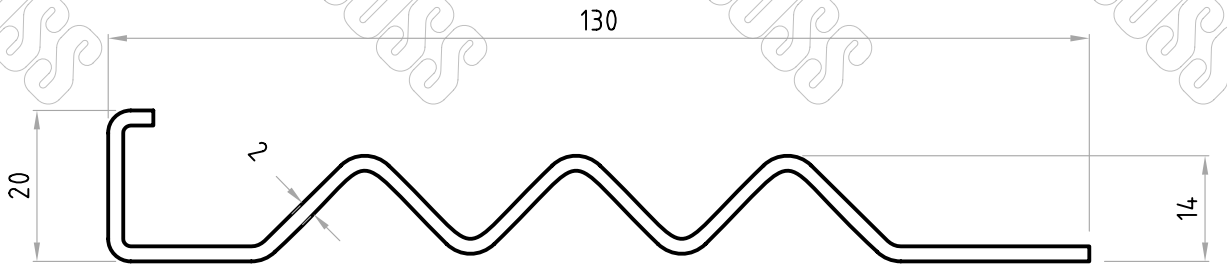


Part No. D00849

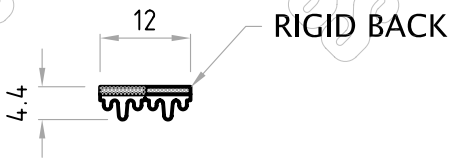


Part No. D02687

* Profile drawings appearing in this section are indicative only. some profiles may be restricted to specific customers, patents and or other limitations,

The material displayed on this page may not be reprinted or otherwise reproduced without the express written permission of Boss Polymer Technologies.

BOSS POLYMER TECHNOLOGIES PTY LTD
Melbourne Australia
PH: (613) 9561 2777
FAX: (613) 9560 8777
www.bosspolymer.com.au
E-MAIL: sales@bosspolymer.com.au

Miscellaneous

# Extrusions

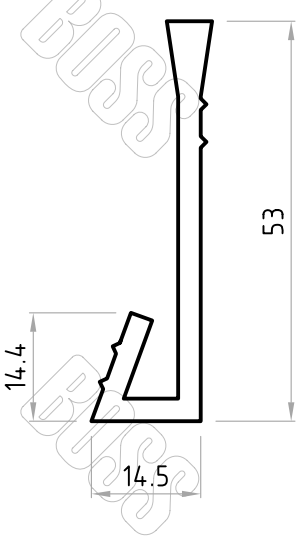


Part No. D03017

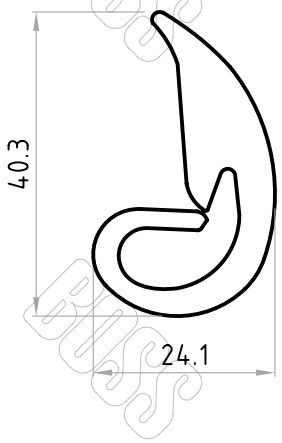


Part No. D03510

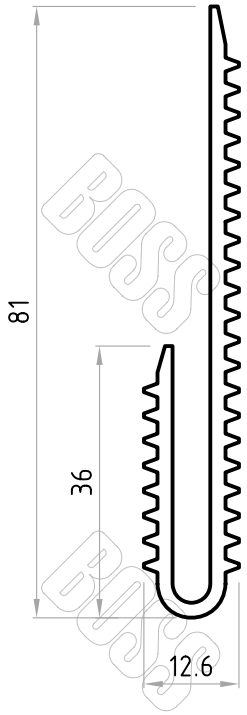


Part No. D02324

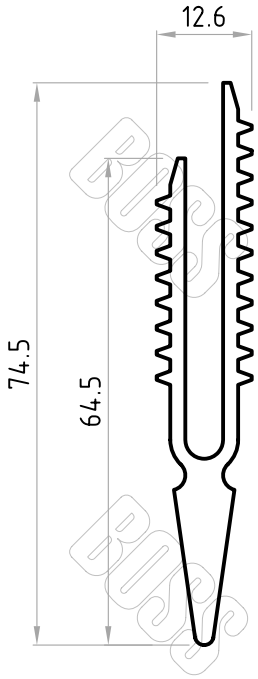


Part No. D03252

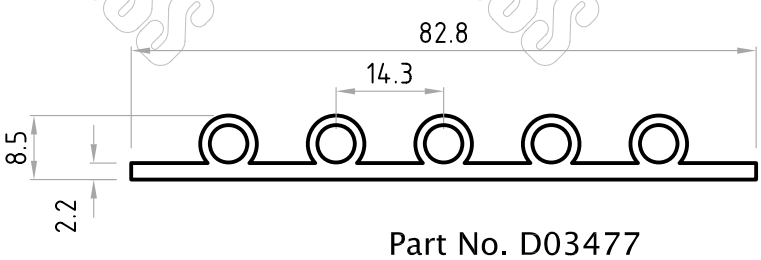


Part No. D03477

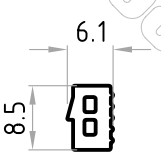


Part No. D03320

* Profile drawings appearing in this section are indicative only. some profiles may be restricted to specific customers, patents and or other limitations,

The material displayed on this page may not be reprinted or otherwise reproduced without the express written permission of Boss Polymer Technologies.

BOSS POLYMER TECHNOLOGIES PTY LTD
Melbourne Australia
PH: (613) 9561 2777
FAX: (613) 9560 8777
www.bosspolymer.com.au
E-MAIL: sales@bosspolymer.com.au

# Miscellaneous
# Extrusions

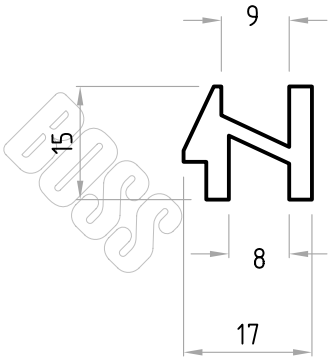


Part No. D02570

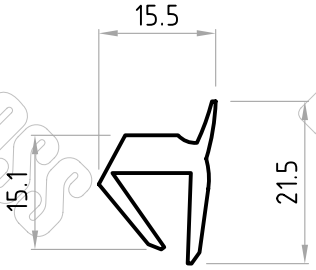


Part No. D02948

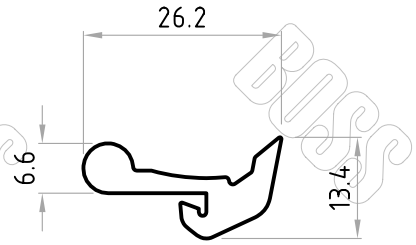


Part No. D02476

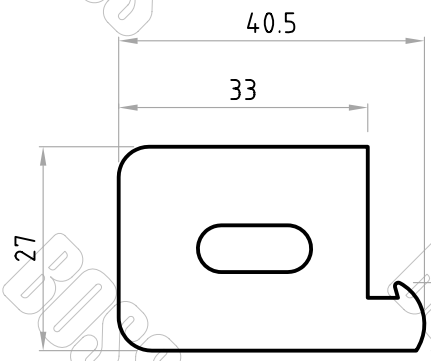


Part No. D03202

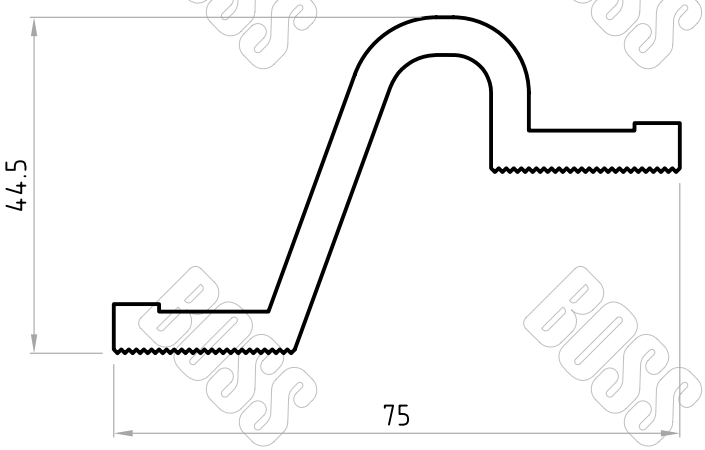


Part No. D02963

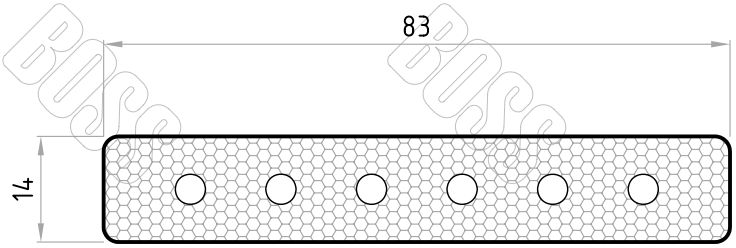


Part No. D03473

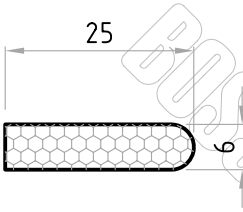


Part No. D02256

Part No. D03262

* Profile drawings appearing in this section are indicative only. some profiles may be restricted to specific customers, patents and or other limitations,

The material displayed on this page may not be reprinted or otherwise reproduced without the express written permission of Boss Polymer Technologies.

BOSS POLYMER TECHNOLOGIES PTY LTD
Melbourne Australia
PH: (613) 9561 2777
FAX: (613) 9560 8777
www.bosspolymer.com.au
E-MAIL: sales@bosspolymer.com.au

# Miscellaneous
# Extrusions

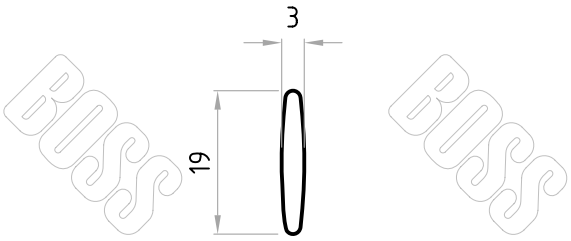


Part No. D02012
Part No. D02190

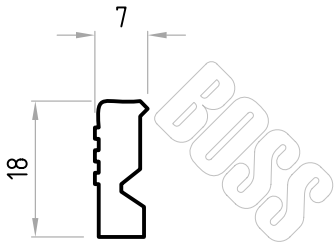


Part No. D02063

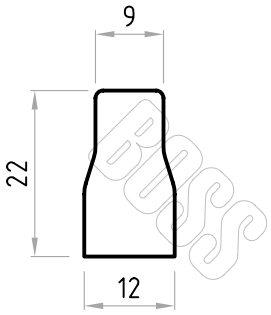


Part No. D02064

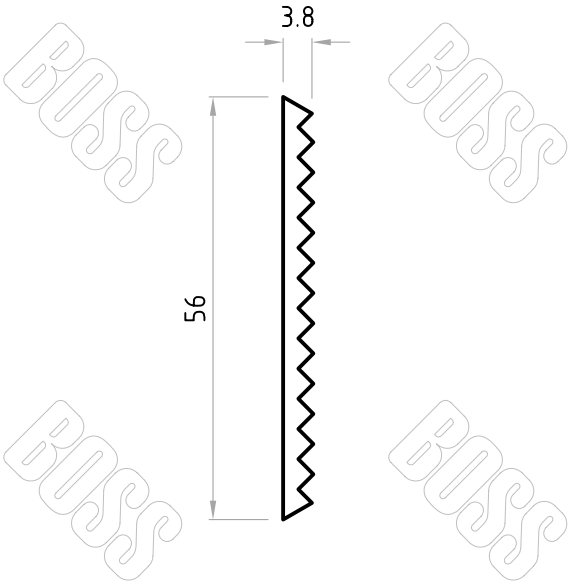


Part No. D02486

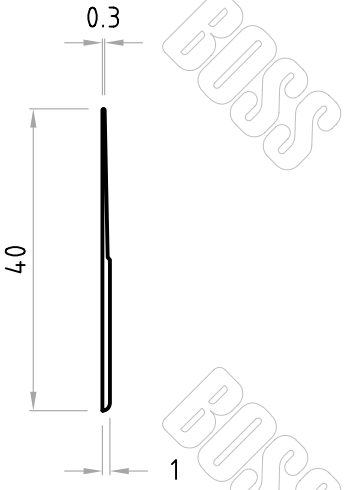


Part No. D02912

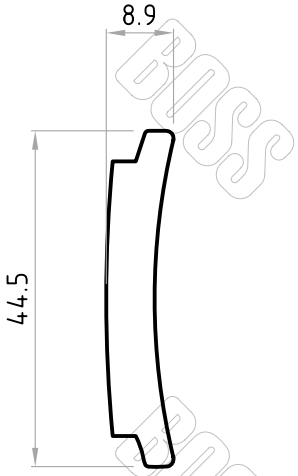


Part No. D03160

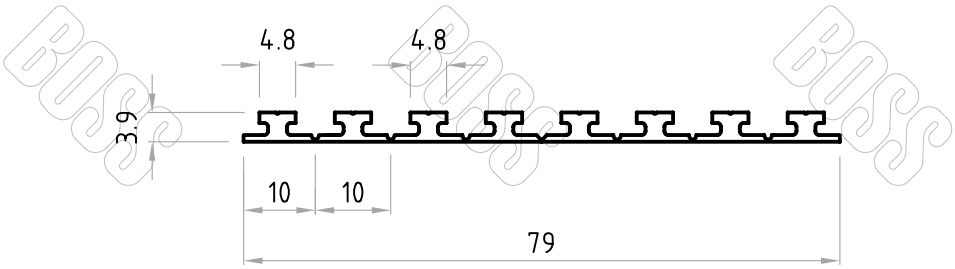


Part No. D03159

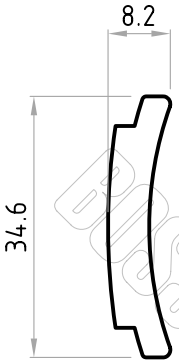


Part No. D03161

* Profile drawings appearing in this section are indicative only. some profiles may be restricted to specific customers, patents and or other limitations,

The material displayed on this page may not be reprinted or otherwise reproduced without the express written permission of Boss Polymer Technologies.

BOSS POLYMER TECHNOLOGIES PTY LTD
Melbourne Australia
PH: (613) 9561 2777
FAX: (613) 9560 8777
www.bosspolymer.com.au
E-MAIL: sales@bosspolymer.com.au

# Miscellaneous
# Extrusions

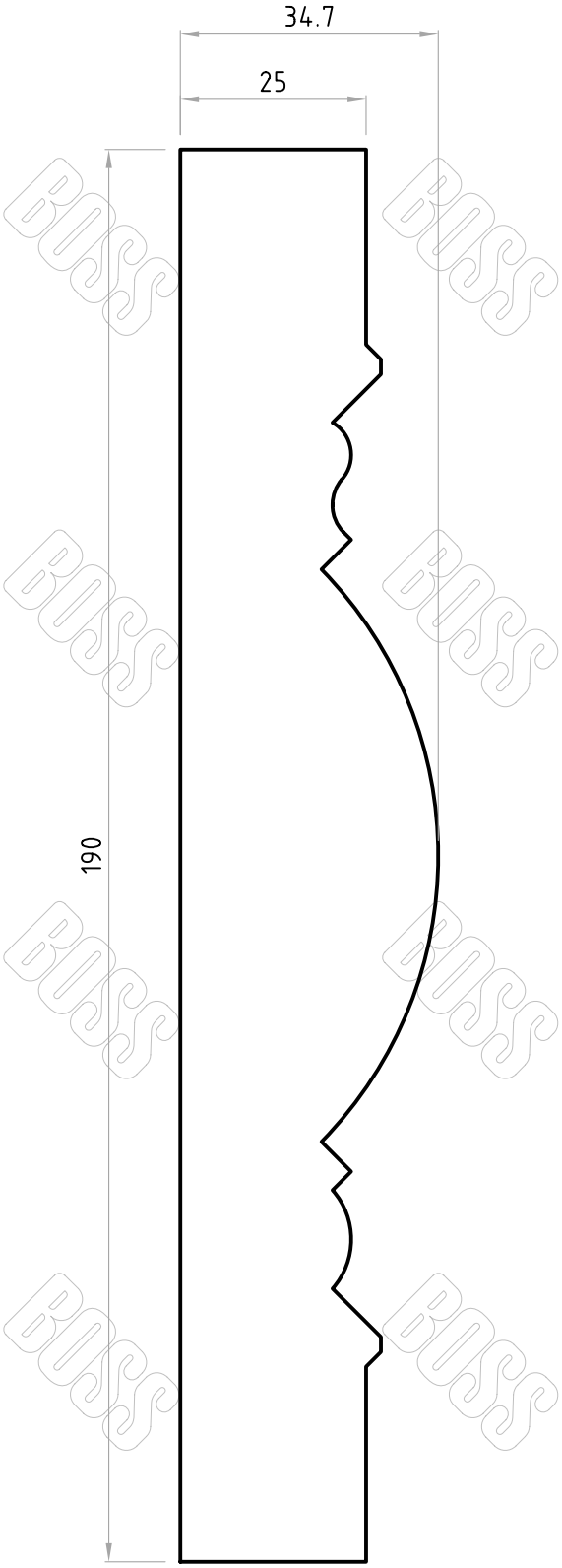


Part No. D00751

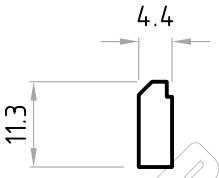


Part No. D03263

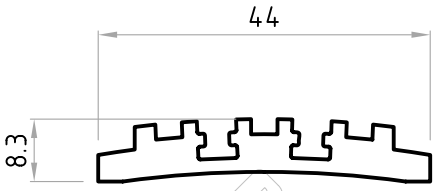


Part No. D03459

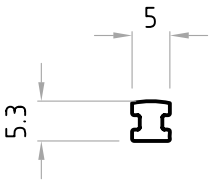


Part No. D03460

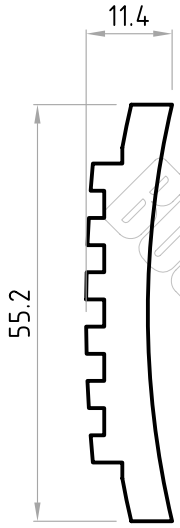


Part No. D02568

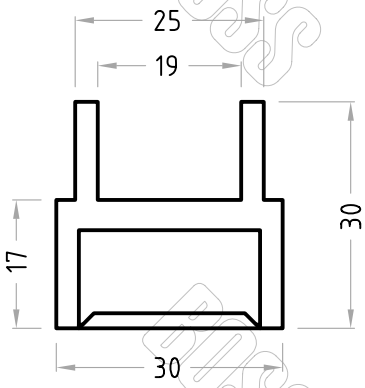


Part No. D03593

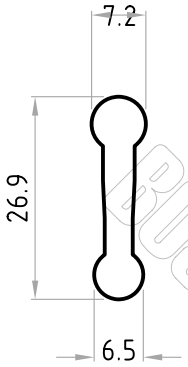


Part No. D02679

* Profile drawings appearing in this section are indicative only. some profiles may be restricted to specific customers, patents and or other limitations,
The material displayed on this page may not be reprinted or otherwise reproduced without the express written permission of Boss Polymer Technologies.

BOSS POLYMER TECHNOLOGIES PTY LTD
Melbourne Australia
PH: (613) 9561 2777
FAX: (613) 9560 8777
www.bosspolymer.com.au
E-MAIL: sales@bosspolymer.com.au

# Miscellaneous
# Extrusions

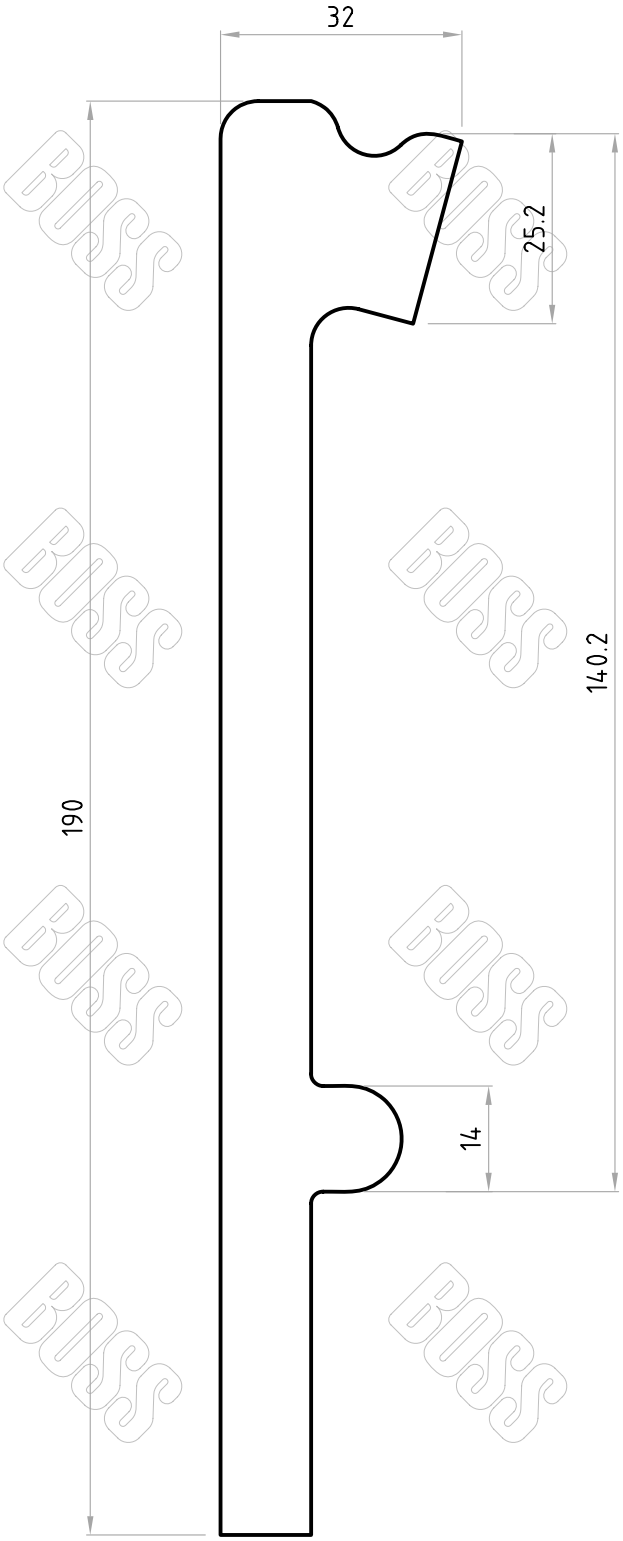


Part No. D00936

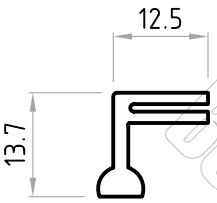


Part No. D02134

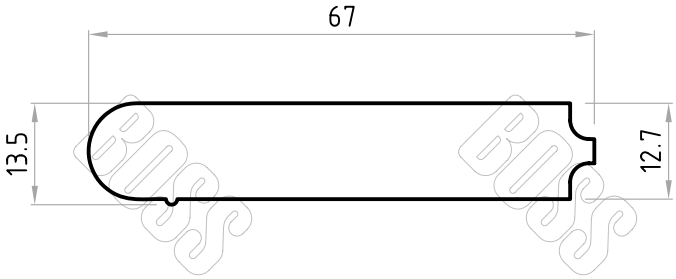


Part No. D03547

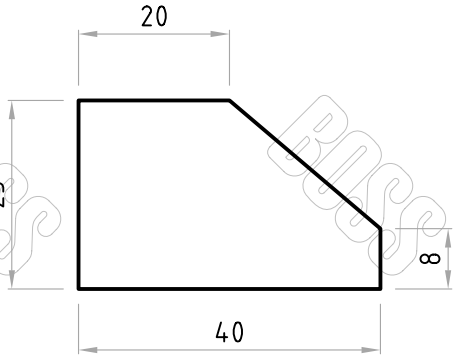


Part No. D02106

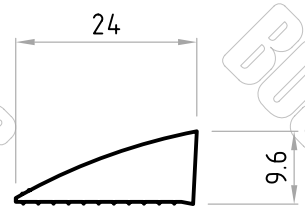


Part No. D03271

* Profile drawings appearing in this section are indicative only. some profiles may be restricted to specific customers, patents and or other limitations,
The material displayed on this page may not be reprinted or otherwise reproduced without the express written permission of Boss Polymer Technologies.

BOSS POLYMER TECHNOLOGIES PTY LTD
Melbourne Australia
PH: (613) 9561 2777
FAX: (613) 9560 8777
www.bosspolymer.com.au
E-MAIL: sales@bosspolymer.com.au

# Miscellaneous
# Extrusions

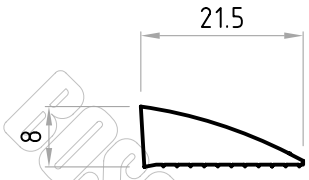


Part No. D03270

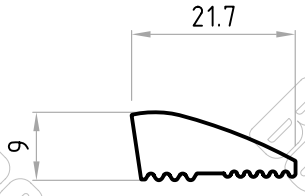


Part No. D03455

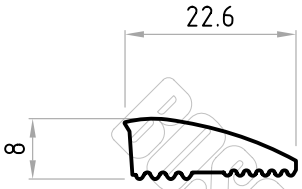


Part No. D03454

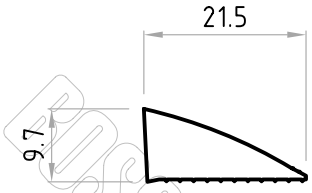


Part No. D03271

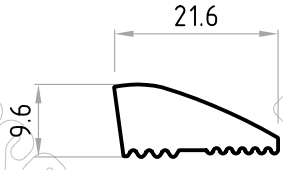


Part No. D03480

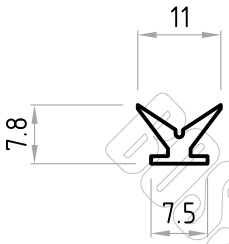


Part No. D02730

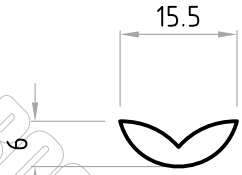


Part No. D03068

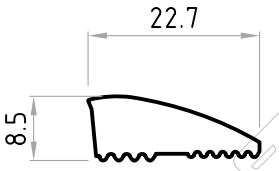


Part No. D03519

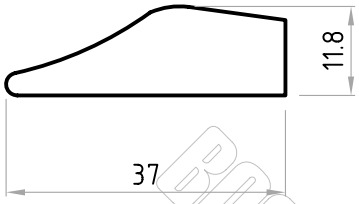


Part No. D03489

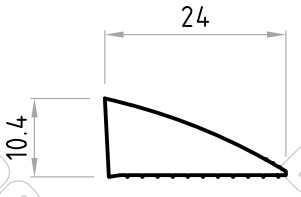


Part No. D03236

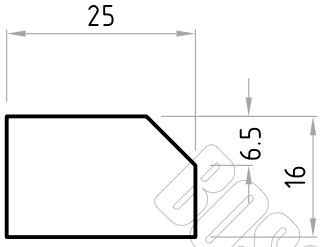


Part No. D02845

* Profile drawings appearing in this section are indicative only. some profiles may be restricted to specific customers, patents and or other limitations,

The material displayed on this page may not be reprinted or otherwise reproduced without the express written permission of Boss Polymer Technologies.

BOSS POLYMER TECHNOLOGIES PTY LTD
Melbourne Australia
PH: (613) 9561 2777
FAX: (613) 9560 8777
www.bosspolymer.com.au
E-MAIL: sales@bosspolymer.com.au

Miscellaneous

# Extrusions

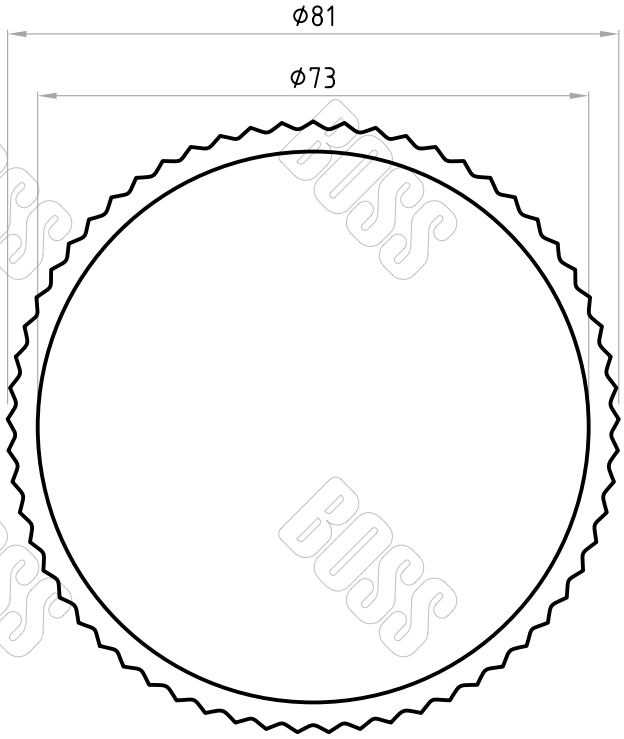


Part No. D02164

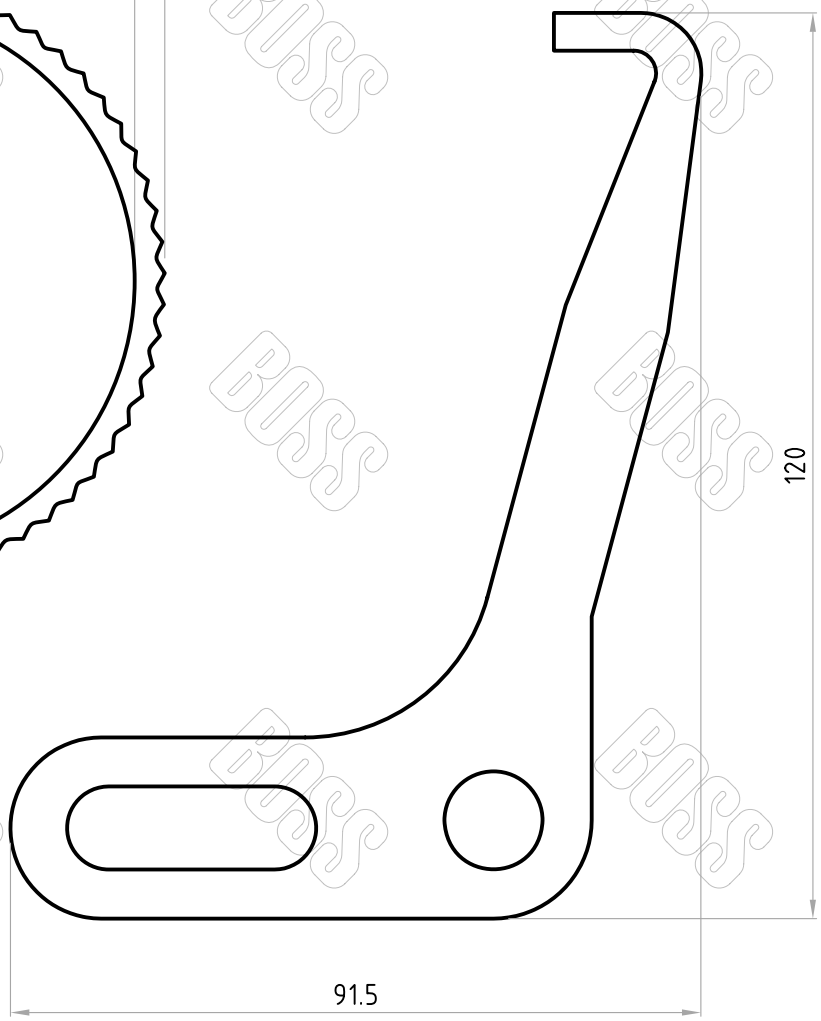


Part No. D00391
Part No. D00394

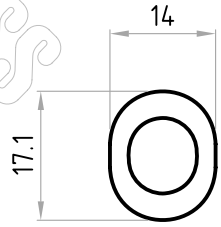


Part No. D02262

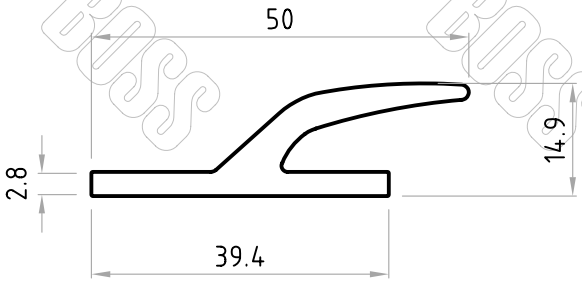


Part No. D03478

* Profile drawings appearing in this section are indicative only. some profiles may be restricted to specific customers, patents and or other limitations,
The material displayed on this page may not be reprinted or otherwise reproduced without the express written permission of Boss Polymer Technologies.

BOSS POLYMER TECHNOLOGIES PTY LTD
Melbourne Australia
PH: (613) 9561 2777
FAX: (613) 9560 8777
www.bosspolymer.com.au
E-MAIL: sales@bosspolymer.com.au

Miscellaneous

# Extrusions

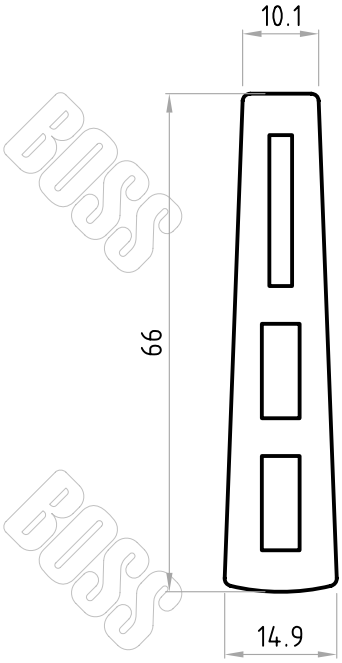


Part No. D02494

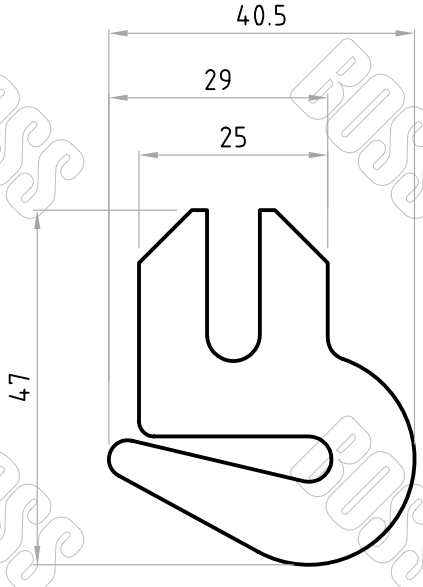


Part No. D02236

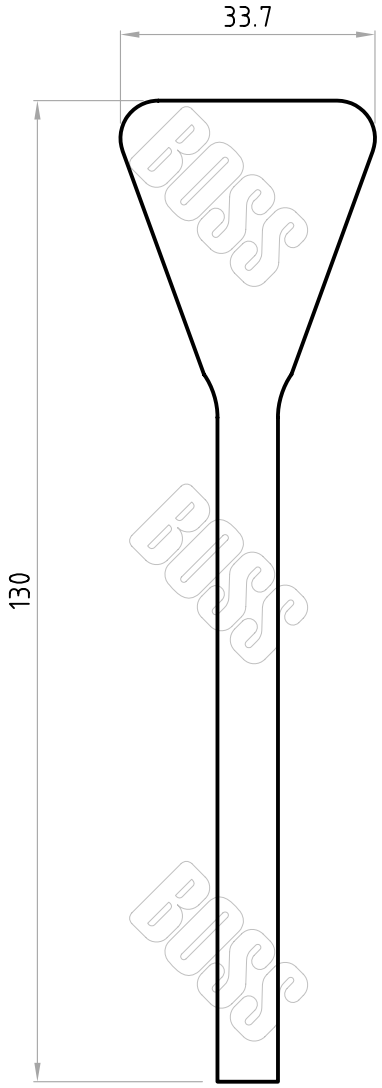


Part No. D03109

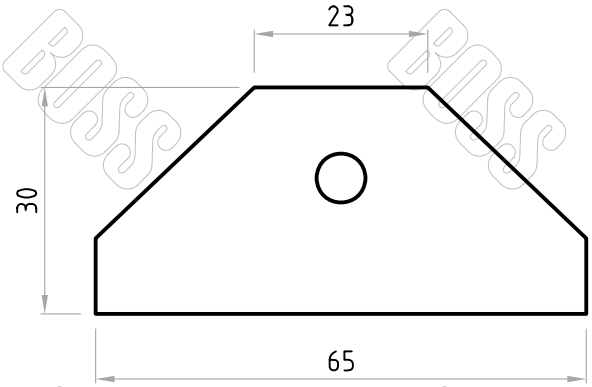


Part No. D02642

* Profile drawings appearing in this section are indicative only. some profiles may be restricted to specific customers, patents and or other limitations,

The material displayed on this page may not be reprinted or otherwise reproduced without the express written permission of Boss Polymer Technologies.

BOSS POLYMER TECHNOLOGIES PTY LTD
Melbourne Australia
PH: (613) 9561 2777
FAX: (613) 9560 8777
www.bosspolymer.com.au
E-MAIL: sales@bosspolymer.com.au