Bottle Gripper
Extrusions

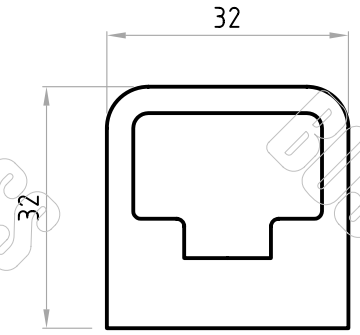

Part No. D03606

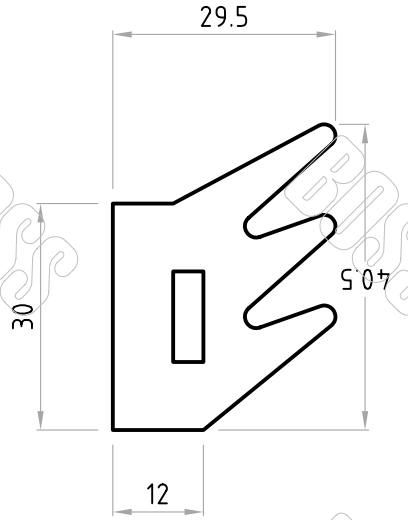

Part No. D00653

* Profile drawings appearing in this section are indicative only. some profiles may be restricted to specific customers, patents and or other limitations,
The material displayed on this page may not be reprinted or otherwise reproduced without the express written permission of Boss Polymer Technologies.

BOSS POLYMER TECHNOLOGIES PTY LTD
Melbourne Australia
PH: (613) 9561 2777
FAX: (613) 9560 8777
www.bosspolymer.com.au
E-MAIL: sales@bosspolymer.com.au