BOSS POLYMER TECHNOLOGIES

Quality Endorsed Company

# Cool Room & Fridge Gaskets,Seals & Bases

# Extrusions

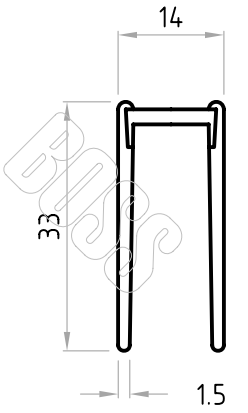


Part No. D02065

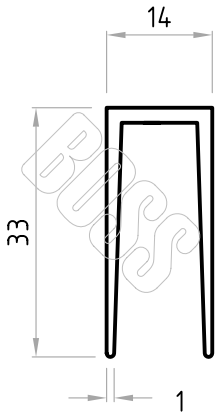


Part No. D02252
Part No. D02497
Part No. D02970

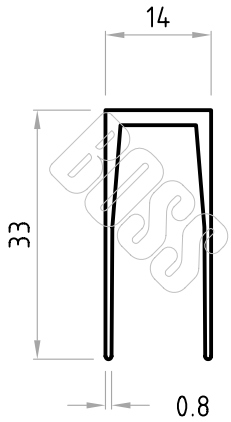


Part No. D03027

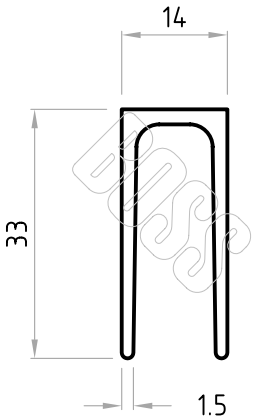


Part No. D02165

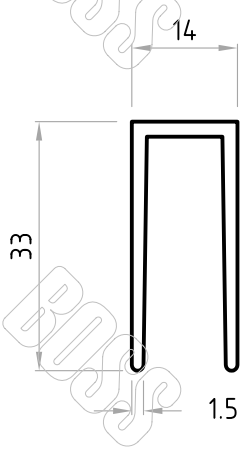


Part No. D01055
Part No. D01070
Part No. D01090
Part No. D02115
Part No. D02116
Part No. D02166
Part No. D02193
Part No. D02044
Part No. D02241
Part No. D02970

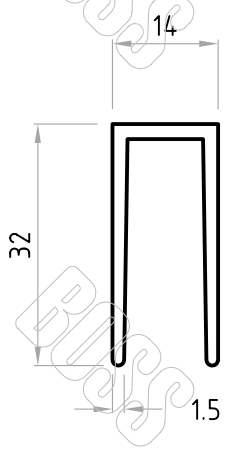


Part No. D00992
Part No. D02009
Part No. D02019
Part No. D02253

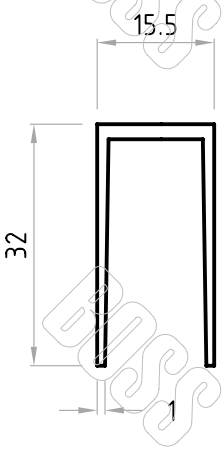


Part No. D00997

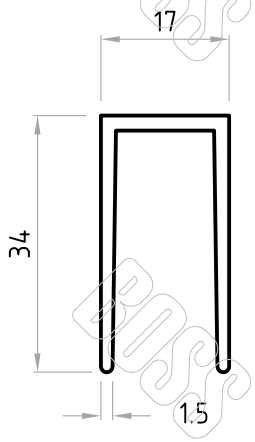


Part No. D02233

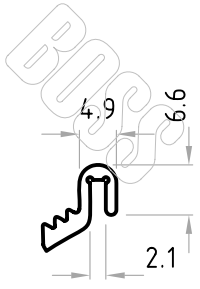


Part No. D03487

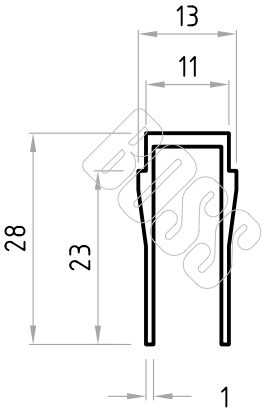


Part No. D02244

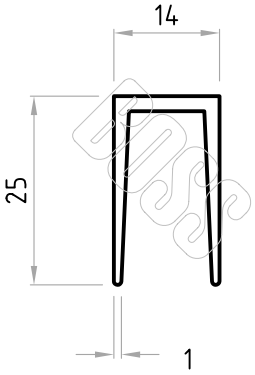


Part No. D02540

* Profile drawings appearing in this section are indicative only. some profiles may be restricted to specific customers, patents and or other limitations,

The material displayed on this page may not be reprinted or otherwise reproduced without the express written permission of Boss Polymer Technologies.

BOSS POLYMER TECHNOLOGIES PTY LTD
Melbourne Australia
PH: (613) 9561 2777
FAX: (613) 9560 8777
www.bosspolymer.com.au
E-MAIL: sales@bosspolymer.com.au

BOSS POLYMER TECHNOLOGIES

Quality Endorsed Company

# Cool Room & Fridge Gaskets,Seals & Bases

# Extrusions

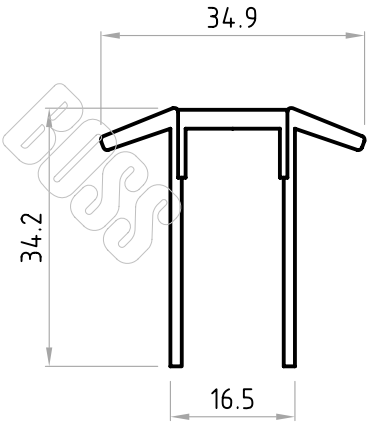


Part No. D02066

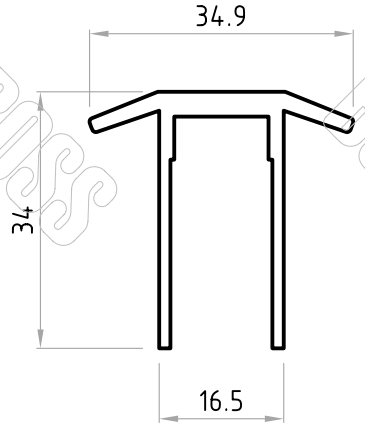


Part No. D01050

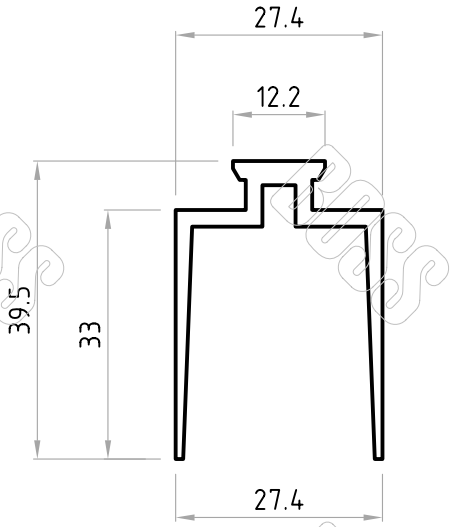


Part No. D02259

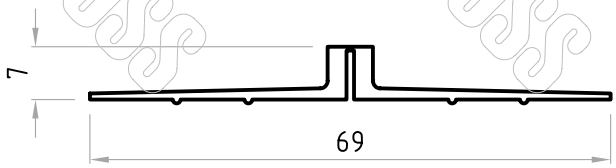


Part No. D01051

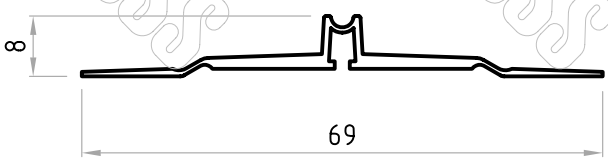


Part No. D03294

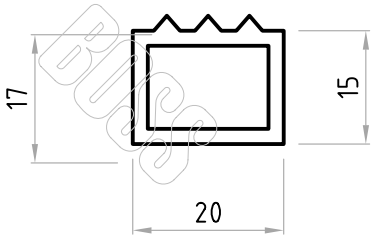


Part No. D01043

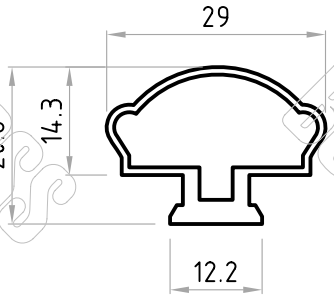


Part No. D02267

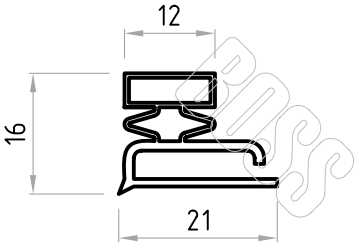


Part No. D01077

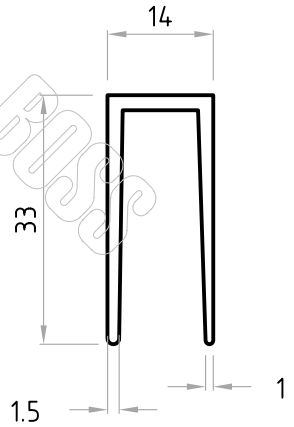


Part No. D01061

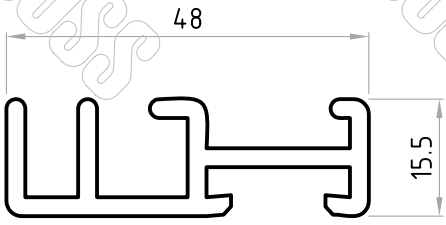


Part No. D02196

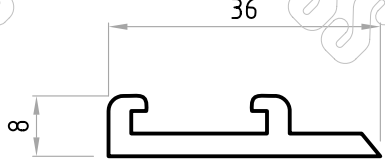


Part No. D02182

* Profile drawings appearing in this section are indicative only. some profiles may be restricted to specific customers, patents and or other limitations,

The material displayed on this page may not be reprinted or otherwise reproduced without the express written permission of Boss Polymer Technologies.

BOSS POLYMER TECHNOLOGIES PTY LTD
Melbourne Australia
PH: (613) 9561 2777
FAX: (613) 9560 8777
www.bosspolymer.com.au
E-MAIL: sales@bosspolymer.com.au

BOSS POLYMERTECHNOLOGIES

Quality Endorsed Company

# Cool Room & Fridge Gaskets,Seals & Bases

# Extrusions

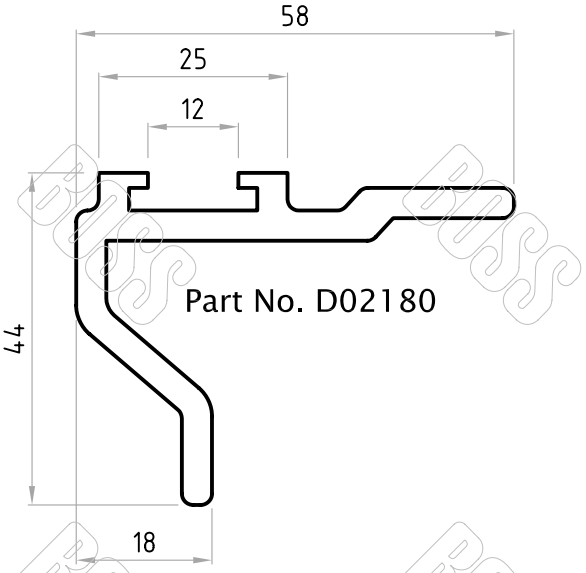


Part No. D02180

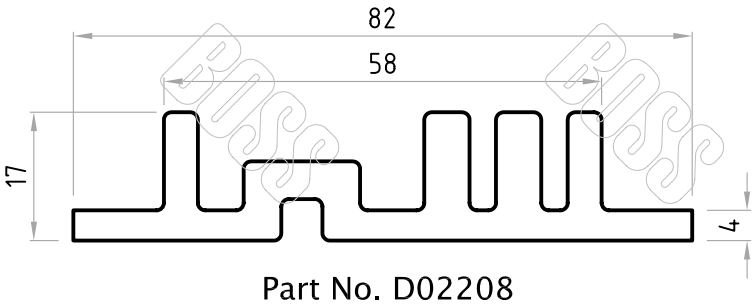


Part No. D02208

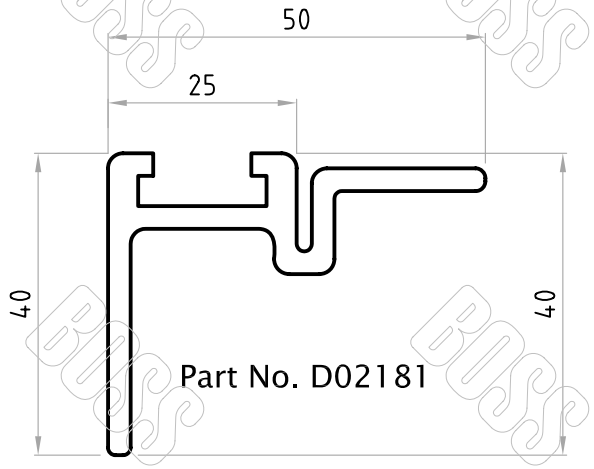


Part No. D02181

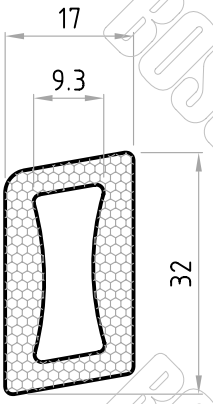


Part No. D02524

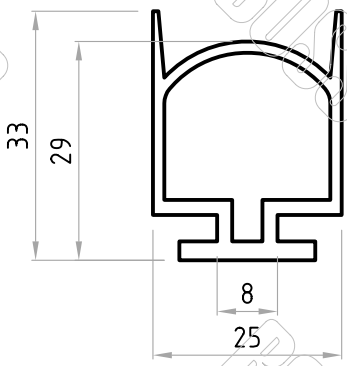


Part No. D00729

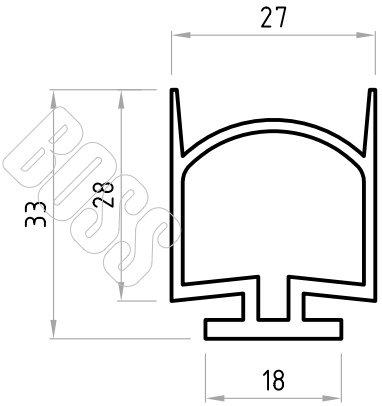


Part No. D01053

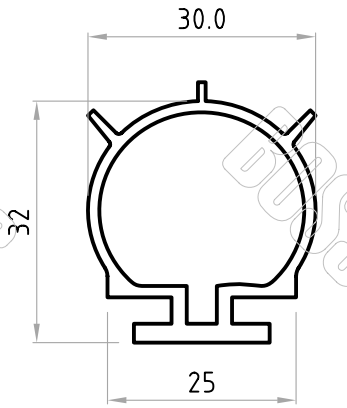


Part No. D01078

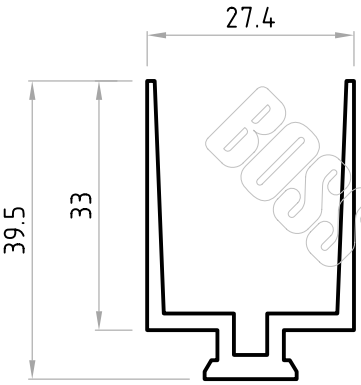


Part No. D02259

* Profile drawings appearing in this section are indicative only. some profiles may be restricted to specific customers, patents and or other limitations,

The material displayed on this page may not be reprinted or otherwise reproduced without the express written permission of Boss Polymer Technologies.

BOSS POLYMER TECHNOLOGIES PTY LTD
Melbourne Australia
PH: (613) 9561 2777
FAX: (613) 9560 8777
www.bosspolymer.com.au
E-MAIL: sales@bosspolymer.com.au